PROFESSOR TECHNOLOGY CO.,LTD

INTRODUCTION

This document provides a Sleeve Dipole Antenna design; this simulation is for 450Mhz antenna .

1. GENERAL DESCRIPTION

Model No	PROFESSOR P/N
CPR28A-450MHz-315mm-SMA/M	PF-28

Below is a table summarizing the antenna design specification.

1.2 Electrica Properties

Parameter	Description
Frequency Band	450MHz±10
Nominal Impedance	50 ohm
Polarization	Vertical
Electrical Wave	1 /2 λ Dipole
V.S.W.R	2.0:1
Antenna Average Gain	0~3dBi
Note: Gain includes the cable loss	

1.2 Mechanical Properties

Parameter	Description
Antenna Type	External Antenna
Antenna Cover	ABS(耐沖擊)
Touch Type	Screw Type
Connector Type	SMA 180°
Antenna Dimensions	88.5mm±2
Antenna Cable Total Length	315mm±10
Antenna Color	Black
Operating Temperature Range	-30°C~+70°C
Storage Temperature Range	-40°C~+80°C

PROFESSOR TECHNOLOGY CO.,LTD

2. **Appearance**

NO.	NAME	Q, TY
01	TOP	01
02	RG-58U Cable	01
03	SMA 180°(Male)	01
04	Heat-shrink tube	01

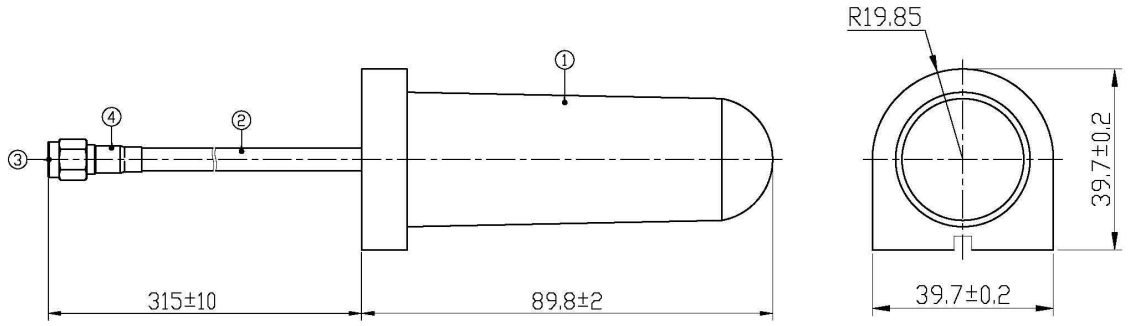

NO	INSP SPEC	TEST INSTRUMENT	NO	INSP SPEC	TEST INSTRUMENT	NO	INSP SPEC	TEST INSTRUMENT
A			C			E		
B			D			F		

NO	DATE	DESCRIPTION	REVISER	VERSION
01				
02				

	CUSTOMER'S	MODEL	PARTS NUMBER	FREQUENCY	UNIT	SCALE	DATE	VERSION
Third angle projection				450MHz±10	M/M		20061013	1
PROFESSOR 普傑國際股份有限公司	TOLERANCE	X.XX±0.15	NAME	PARTS NUMBER	APPROVED	CHECKED	DRAWING	DESIGNED
	SURFACE ROUGHNESS	S	APPEARANCE	PF-28				

4. FREQUENCY

PROFESSOR TECHNOLOGY CO.,LTD

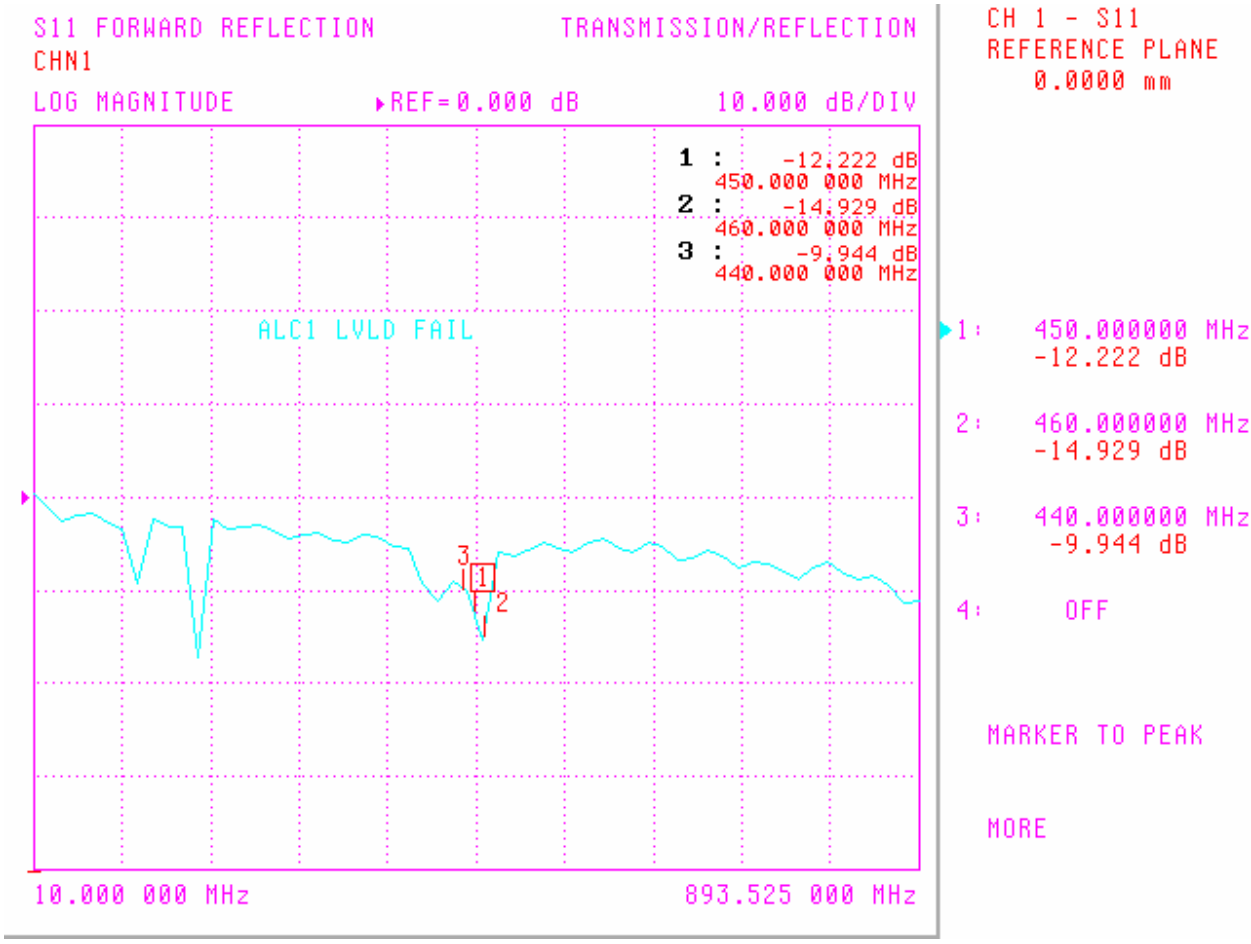

PROFESSOR TECHNOLOGY CO.,LTD

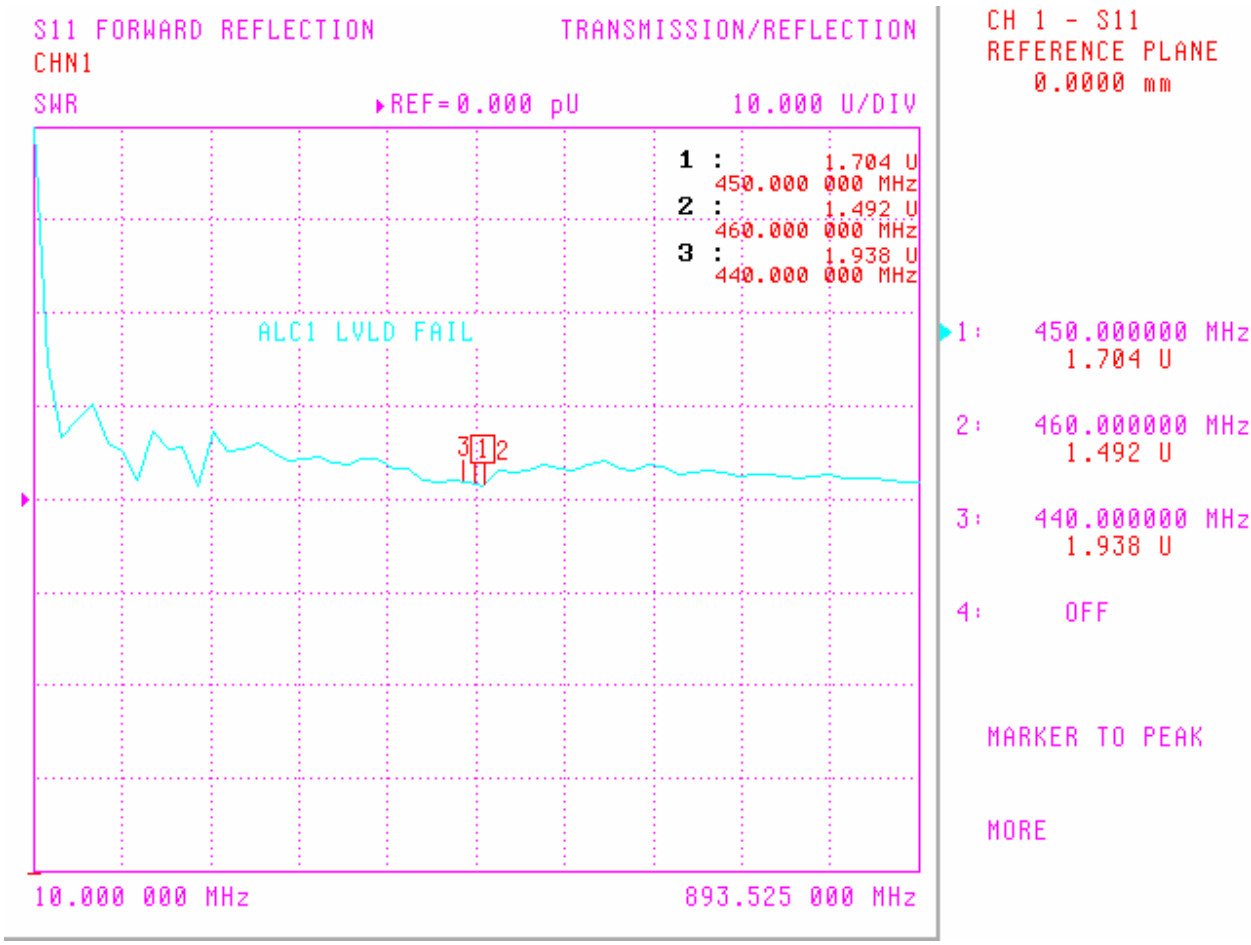
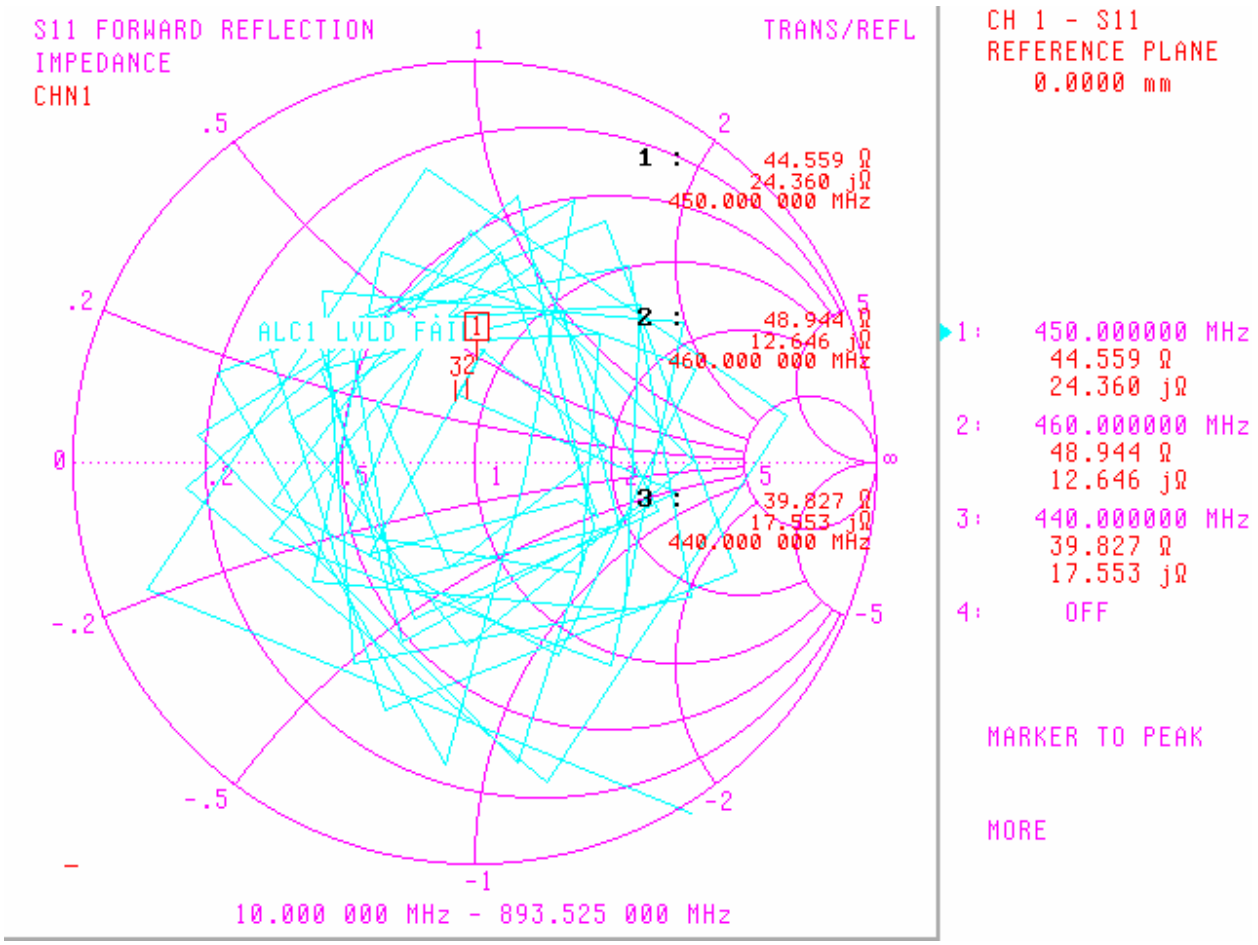
PROFESSOR TECHNOLOGY CO.,LTD