NO.	NAME	FINISH	Q, TY
01	SMA 180° Female	Colden plating	01
02	**Ø1.13Cable**	Gray	01
03	MMCX 90° (Male)	Colden plating	01
04	Heat-shrink tube	Black	02

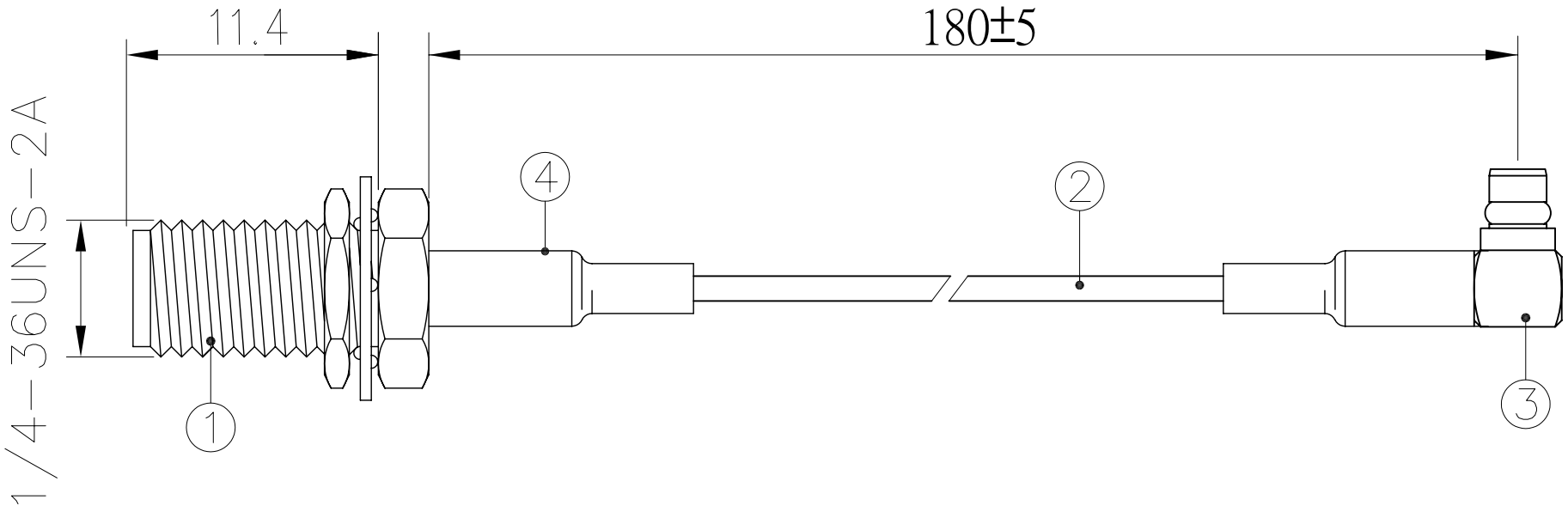

Third angle projection	CUSTOMER'S	MODEL	PARTS NUMBER	FREQUENCY	UNIT	SCALE	DATE	VERSION
					M/M		20070712	1
PROFESSOR 普傑國際股份有限公司	TOLERANCE	X.XX±0.15	NAME	PARTS NUMBER	APPROVED	CHECKED	DRAWING	DESIGNED
	SURFACE ROUGHNESS	S	APPEARANCE					